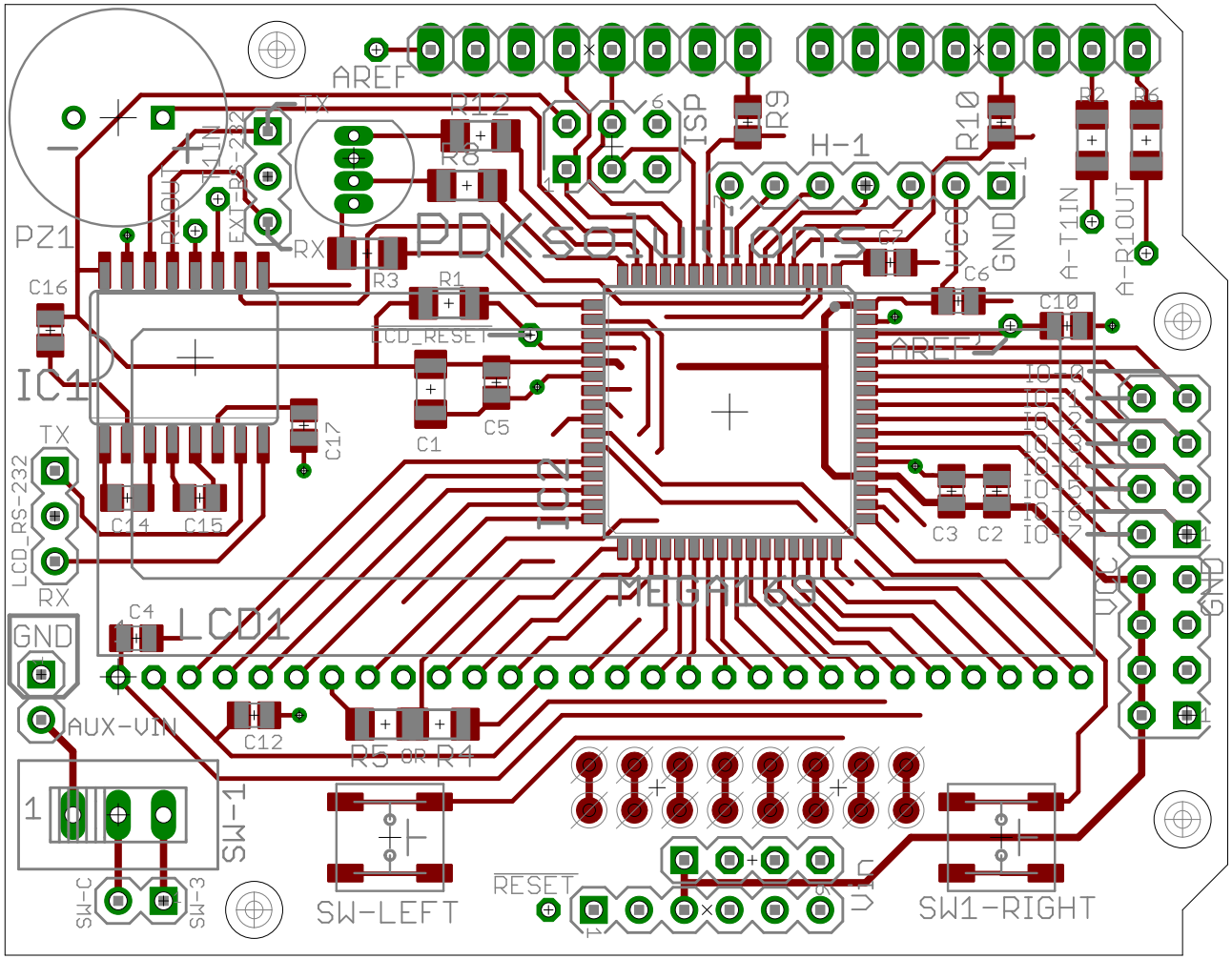
AREF
R12
R8
TX
RX
R3
R1
LCD_RESET
C1
C5
C17
C16
PZ1
IC1
C14
C15
LCD_RS-232
C4
LCD1
GND
AUX-VIN
C12
R5 OR R4
SW-1
SW-C
SW-3
SW-LEFT
RESET
SW1-RIGHT
PDK solutions
IC4
MEGA169
ISP
R9
H-1
R10
VCC
GND
C7
C6
C10
A-T1IN
A-R1OUT
R2
R6
IO-0
IO-1
IO-2
IO-3
IO-4
IO-5
IO-6
IO-7
C3
C2
VCC
GND